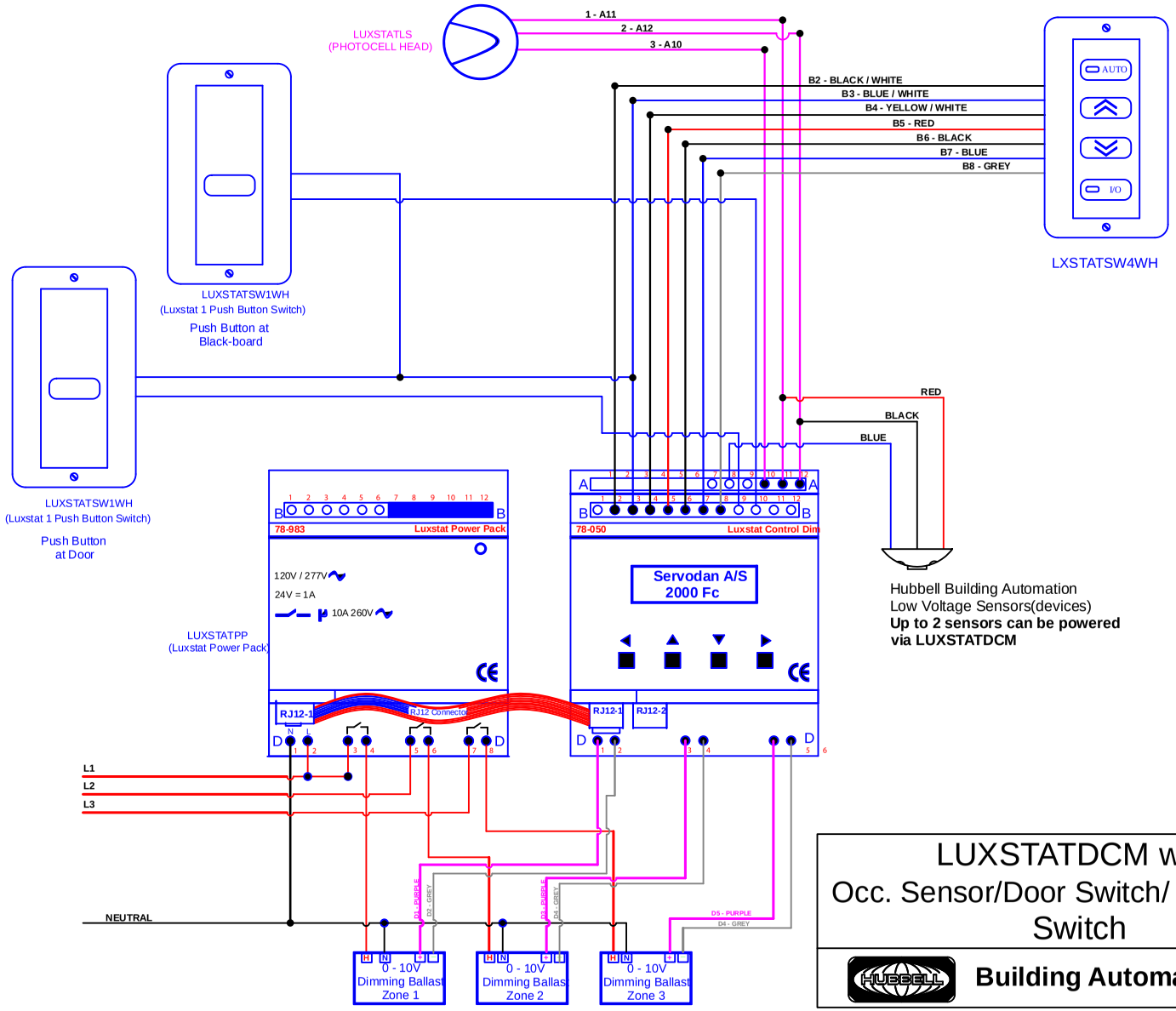

LUXSTATDCM with Occ. Sensor/Door Switch/ Blackboard Switch

Building Automation, Inc.