All Network Segments

Note: Each network segment shall not exceed 56 devices (panels, switches, sensors) or 1500 ft of wire. The quanity of panels, switches, and sensors shown is to illustrate conceptual wiring scheme only. The actual connection and number of devices will be determined by actual locations on the plans.

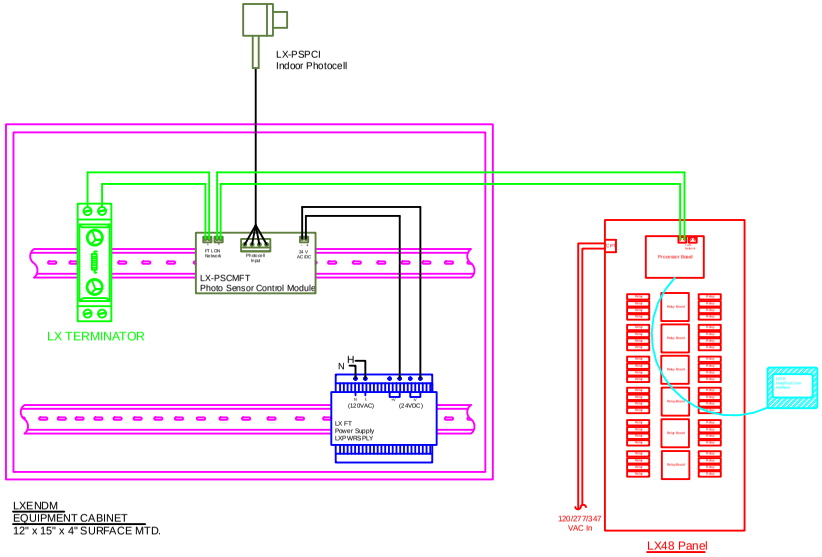
LX-PSPCI
Indoor Photocell
FT LON Network
Photocell Input
24 V AC/DC
LX-PSCMFT
Photo Sensor Control Module
LX TERMINATOR
N
H
L
(120VAC)
N
(24VDC)
LX FT
Power Supply
LXPWRSPLY
LXENDM
EQUIPMENT CABINET
12" x 15" x 4" SURFACE MTD.
Uplink
Processor Board
Relay Board
Relay Board
Relay